Dual-spectrum PT Network Thermal Camera

Quick Start Guide

V1.0.0

Preface

The following is about the correct use of the camera. In order to prevent danger and loss of property, please read this manual carefully before using the camera and strictly follow it during use. Please keep the manual properly after reading.

Overviews

This manual is suitable for dual-spectrum PT network thermal cameras. This manual describes the installation steps, installation precautions and basic operations of dual-spectrum PT network thermal cameras.

Symbol Description

The description of the symbols that appear in the document is as follows.

Instruction	The instructions are an emphasis and supplement to the main text.
Caution	Cautions indicates potential risks. If ignored, it may lead to product damage, data loss, product performance degradation, or unpredictable results.
Warning	Warnings indicates that low or medium potential risk is existing. The ignorance of the warnings may lead to injury, equipment damage, or business interruption.
Danger	Dangerous text indicates that there is a high potential risk. If it is not avoided, a major risk of personal injury or even death may be caused.

Important Safety Notice

Warnings

The local electrical safety standards should be rigorously followed in the process of installation and usage.

- Please use power adapter which is produced by regular companies. Please check whether the power is normal or not before starting the camera. (Power supply requirements should comply with that on the product labels.)
- In order to make emergency power off when necessary, please install power-off equipment which is easy to use when installing the wires.
- Please protect power lines from being treaded or pressed, especially the connecting points which are led from the plug, power socket or other unit.
- Please make sure the camera is fixed firmly in case of being installed on walls or ceilings.
- If the camera does not work normally, please contact the purchased shops or factories. Do not disassemble or revise the camera in any way (The manufacturing company is not responsible for problems that are caused by unauthorized modification or maintenance.)

Cautions

- Please do not put the camera in damp, dusty, extremely hot or cold places, or places with corrosive gas or unstable light.
- Please transport, use and store the camera within the allowable humidity and temperature range.
- Avoid making the lens aiming at strong light (e.g. sun or laser), otherwise the imaging sensor would be damaged.

- Please do not block the vents near the camera in case of heat accumulated.
- Please use the factory packaging or materials of the same quality when shipping the device.
- Please do not press, vibrate violently or soak the camera during transportation, storage or installation.
- It is advised to use the camera with lighting protector.
- Soft dry cloth can be used to clean the camera. For the dirt difficult to clean, please use soft cloth with little neutral detergent and then wipe dry. Do not use volatile detergent like alcohol, benzene or diluent, or strong and abrasive detergent, otherwise the camera coating would be damaged and also the camera performance could be degraded.
- The lens cover is optical device, so please do not touch directly or wipe the cover. Soft brush or hairdryer can be used to blow the dust away. For the grease or fingerprint, soft cloth can be used to wipe it away. Cotton cloth or lens cleaning paper with cleaning solution can be used to wipe repeatedly until it’s clean.
- Please revise the password promptly after logging in.

Instruction

- Please use the accessories or parts specified by the manufacturer and have them installed and repaired by professional service personnel.
- Quality requirements for installation and maintenance personnel:
  Personnel should have the qualification certificate or experience to engage in the installation and maintenance of video surveillance systems, and have the qualification to engage in related jobs (such

as high-altitude operations, etc.), in addition to the following knowledge and operating skills.

Equipped with basic knowledge and installation skills of video surveillance system and its components.

Equipped with basic knowledge and operating skills of low-voltage wiring and low-voltage electronic circuit wiring.

Equipped with basic network security knowledge and skills, and have good acknowledge of this manual.

- Requirements for lifting equipment:

  Safe lifting equipment suitable for site and method of camera installation.

  The lifting equipment is able to reach enough height of installation position.

  The lifting equipment has good safety performance.

Table of Contents

1. Camera Introduction

1.1 Camera Description

The dual-spectrum PT network camera is a thermal imaging network camera that integrates remote monitoring in all-weather conditions, video services and high-definition camera functions. In addition to the basic visible light imaging, the camera also comes with a thermal imaging channel, which can more comprehensively collect the characteristic information of the measured scene while realizing dual-light shooting. It can be widely used in indoor and outdoor scene monitoring, perimeter prevention, fire warning integration and other fields of smart security.

1.2 Camera Features

- With the latest InfiRay® 12μm IR thermal imaging detector, the thermal camera can make farther and clearer images.
- With a maximum thermal imaging resolution of 1.3 megapixels and a 35x 4 megapixel visible light camera，high-definition dual-spectrum imaging can be achieved.
- Support 75mm fixed-focus and 25～75mm continuous zoom infrared lens, which can meet various inspection needs.
- Support network high-definition transmission, which can transmit visible light videos and infrared videos at the same time.
- Combining multiple network monitoring methods, the camera also supports ONVIF protocol.
- With high-speed, high-precision pan-tilt, the network camera supports 5 scanning methods and 17 scanning track with speed memory;

- Support smart fire detection to meet the requirements of forest fire protection and smart fire protection
- Support intelligent infrared video analysis, including intelligent analysis functions such as regional intrusion, trip wire, etc.
- IP66

1.3 Camera Appearance

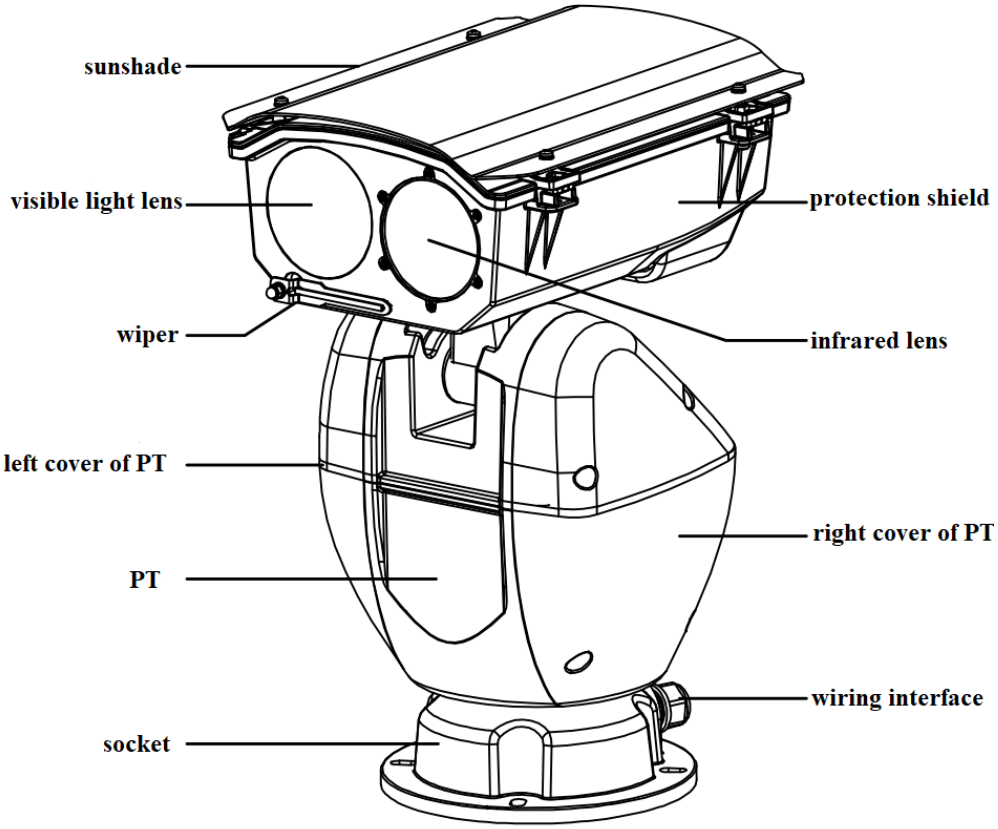

Figure 1.1 Appearance and Interface of Dual-spectrum PT Network Thermal Camera

1.4 Cable Instructions

The cable includes interfaces for power, alarm, audio, RS-485, and network, etc. Please see the following figure for interface instructions.

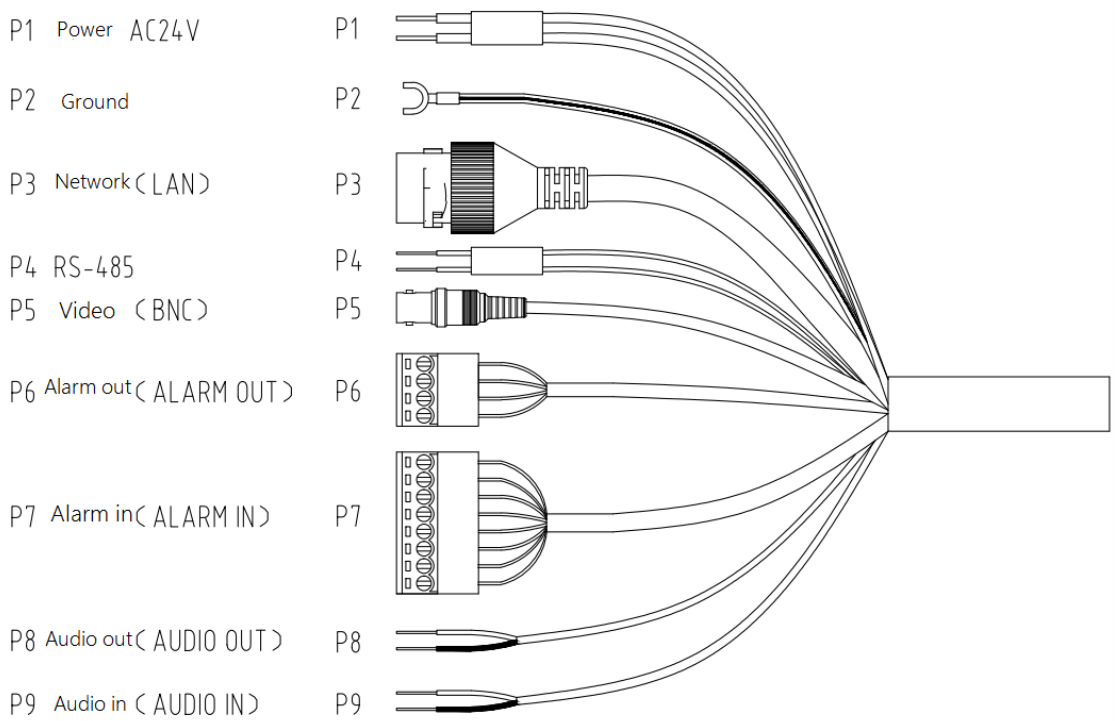

Figure 1.2 Cable Instructions

- P1 power interface (AC24V): Support AC 24V power supply.
- P2 ground interface (GND): Ground interface.
- P3 network interface (LAN): Output network signal and connect to standard Ethernet cable.
- P4 RS-485 interface (485):RS485 interface for PT control.
- P5 video interface (BNC): Output standard PAL analog videos.
- P6 alarm output (ALARM OUT): Output alarm switch signal to alarm equipment.
- P7 alarm input (ALARM IN): Receive the switch signal from the external alarm source.
- P8 audio output (AUDIO OUT): Output audio signal to speakers and other equipment for sound output.
- P9 audio input (AUDIO IN): Input audio signal and connect microphone for receiving linear analog audio signal to collect sounds.

1.5 Alarm Interface Connection

The camera can be connected with alarm signal (0～DC5V) input and switch output (no voltage). An external power supply is required when connecting the alarm. The specific wiring method is shown in the figure below.

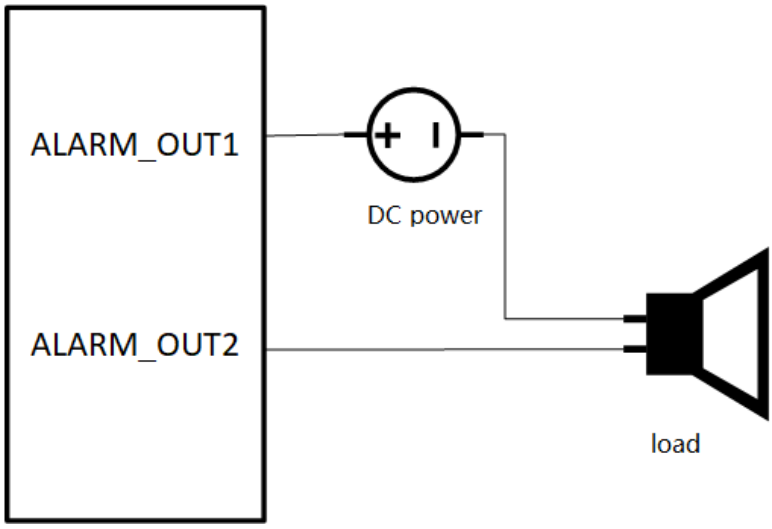

Figure 1.3 Alarm Output Wiring Method

2. Camera Installation

2.1 Instructions before Installation

- Before installation, please make sure that the camera in the package is in good condition and all parts are complete.
- Before installing the PT, please prepare in advance the tools and cables that may be required for installation.

2.2 Cable Planning and Wiring

It is necessary to survey and plan the lines in advance since the environment and location of the PT installation is different, and then to arrange the lines precisely so as to provide safe and stable power and wiring for the PT. In the process of cable planning and wiring, you need to

follow the below suggestions:

- Before performing cable wiring operations, familiarize yourself with the installation environment, including wiring distance, wiring environment, and whether it is far away from magnetic field interference and other factors.
- Please select a wire with a rated voltage greater than the actual line voltage for the PT to ensure the normal operation of the PT under the condition of unstable voltage.
- To avoid disconnection, the connection of the PT should be done independently with one wire; if the conditions are limited, it is also necessary to protect the connection and take reinforcement measures to prevent the equipment from malfunctioning due to circuit aging.
- Strengthen the protection for power lines and signal transmission lines. Pay special attention to the reinforcement and protection of the line during the wiring process, so as to avoid abnormal monitoring due to wiring damage.
- During the wire deployment process, do not make the wires too long or too short.

The cable wiring of the PT should be operated by personnel with professional skills. When the PT fails to work normally, you can investigate the cause in the above-mentioned aspects.

2.3 Mounting Bracket

The PT is different from other cameras. The overall quality is heavy, which has high requirements for the load-bearing and stability of the support. It is generally recommended to install it directly on the base to avoid potential safety hazards.

If mounting a bracket is necessary, you can design the corresponding bracket according to the base map of the PT. The bracket design must

consider factors such as load-bearing and anti-shake to ensure that the bracket is firm and the smoothness of the image.

2.4 TF Card Installation

Step 1: The TF card slot is located inside the device. Use the hexagon H1.5 screwdriver to unscrew the set screws, as shown in the figure below.

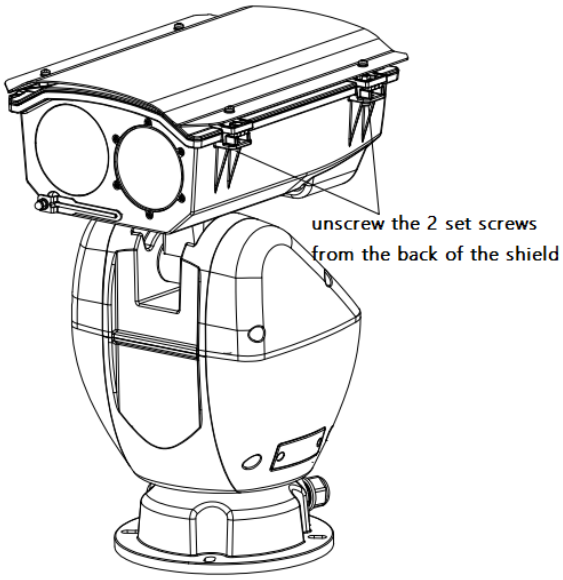

Figure 2.1 Unscrew Set Screws of the Shield

Step 2: After opening the shield, slowly insert the TF card into the TF card slot in the direction indicated by the arrow. After hearing a "click", the installation is complete, as shown in the figure below.

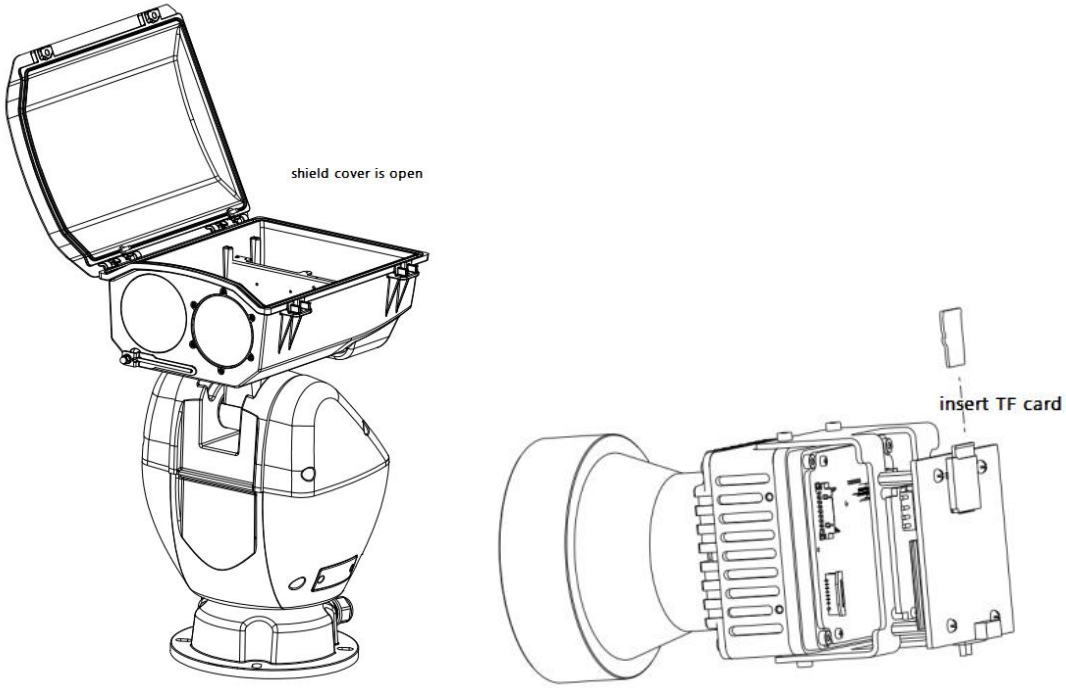

Figure 2.2 Install TF Card

Step 3: After installation, close the TF card slot cover and tighten the screws.

2.5 PT Installation

Step 1: Take out 4 screws with a diameter of 8mm and a length of 25mm from the accessory bag, and fix the PT on the base of the bracket.

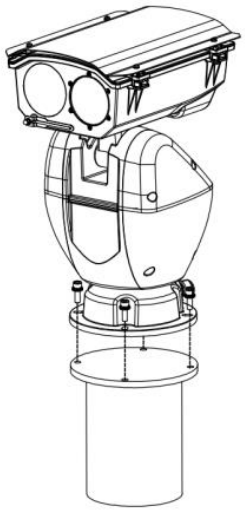

Figure 2.3 Fix the PT on the Base

Step 2: After connecting the cable to the PT, supply power to it. After completing the self-check, check whether the preview is normal. If the control of PT is normal, the installation is complete.

2.6 Install Network Port Protective Cover

When using the camera, install the matching network port waterproof cover to prevent water from entering the network cable. Please install it if necessary. The installation steps are as follows:

Step 1 Pass the network cable through the fastening nut and the main body of the waterproof cover in turn.

Step 2 Break off the waterproof rubber ring and put it on the network cable between the main body of the waterproof cover and the fastening nut.

Step 3 Put the O-shaped rubber ring into the network port, and insert the network cable into the network port.

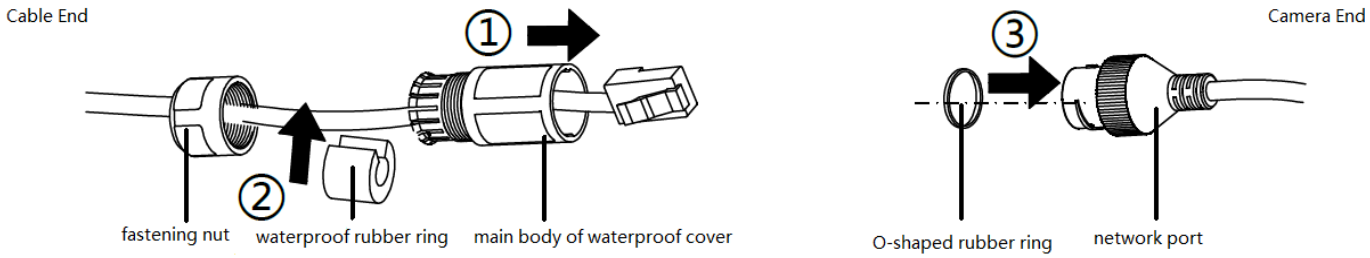

Figure 2.4 Network Cable Installation

Step 4 Align the notch of the network port with the buckle of the main body of the waterproof cover, put the main body of the waterproof cover into the end of the network port, and tighten it clockwise.

Step 5: Insert the waterproof rubber ring into the main body of the waterproof cover.

Step 6: Turn the fastening nut clockwise and press the waterproof rubber ring tightly.

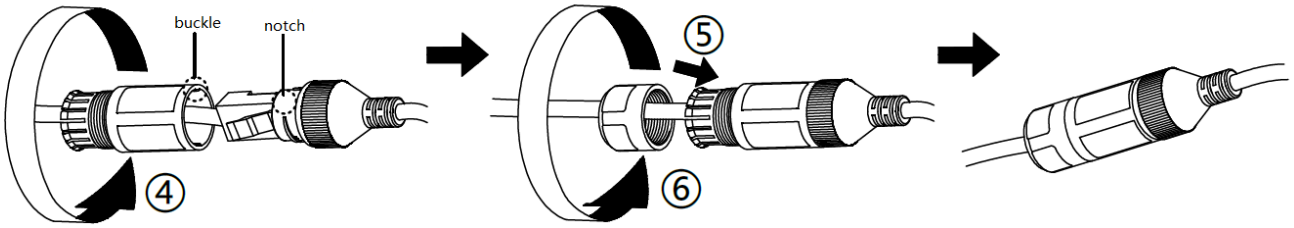

Figure 2.5 Finishing Installation

3. Operation Guide

3.1 Preparations

1.The default IP address of the device：192.168.1.108(infrared), 192.168.1.109(visible light)；

2. The subnet mask is 255.255.255.0, and the IP address of the PT can be modified. If you change the device address to 192.168.1.194, change your computer's IP address to the same network segment with the network video server, and the same subnet mask. Such as: 192.168.1.120;

3.Test whether the PT can start normally. Under WINDOWS, follow the <Start→run→cmd> operation, open the command line window, and enter Ping 192.168.1.108 in the command line window. If "Request time out" is not displayed, it means the startup is normal

4.Support browsers such as IE/360.

3.2 Login System

1. Enter the IP address of the PT in the address bar of IE browser to log in, and the login page is as shown below.

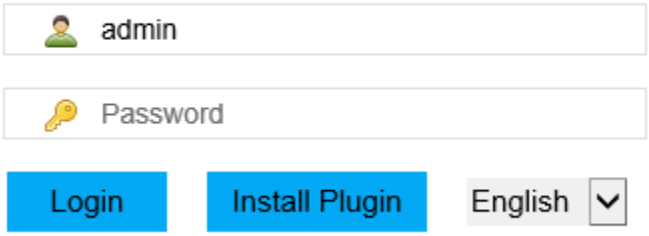

Figure 3.1 Login Interface

2. Enter the user name: admin (defaulted, administrator user).
3. Enter the password: admin (defaulted, administrator password).
4. Click [OK] button to enter the preview screen of the video server. As shown below:

Figure 3.2 Preview Interface of Visible Light

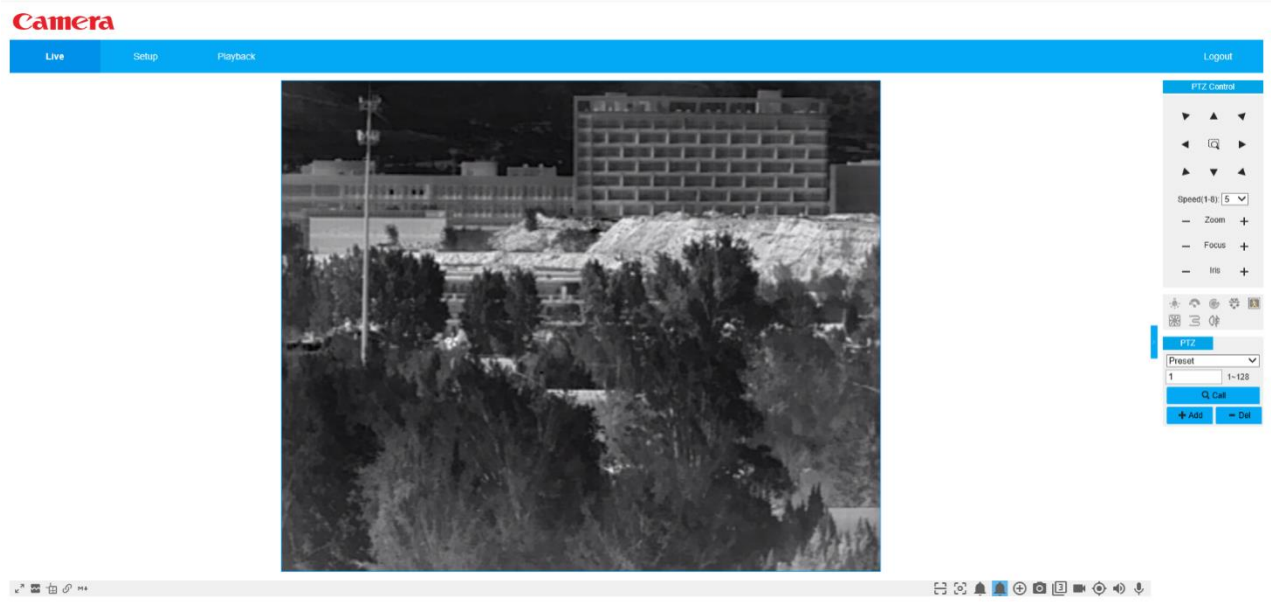

Figure 3.3 Preview Interface of Infrared

3.3 Main Interface Description

The main interface of the PT camera is divided into system menu, video window adjustment, video window function options, PT configuration, PT settings, etc. Please refer to the web instructions for details.

Appendix A Camera Maintenance

Lens Maintenance

The lens surface is coated with anti-reflective coating. When contaminated with dust, grease, and fingerprints, harmful substances will be produced and the degraded performance, cratches, or mold will be caused. Once dirt is found, please follow the following methods.

Dust stained: Use an oil-free soft brush or a blower ball to gently flick the dust off.

Grease stained: Gently wipe away water or oil with a soft cloth and dry it, then rub it outward from the center of the lens using an oil-free cotton cloth or lens cleaner coated with alcohol or lens cleaner. If it is still not clean, you can change the cloth and wipe it several times.

Network Safety Maintenance

In order to ensure the network security of the PT camera, it is recommended that you conduct regular network security assessment and maintenance of the network system. Corresponding professional technical service can be offered.

Appendix B Operating Distance

The recommended distance of detecting, recognizing and identifying for man (1.8×0.5m) and vehicles (1.4×4.0m) are as follows:

Equipped Lens	DD (Vehicles)	DD (People)	RD (Vehicles)	RD (People)	ID (Vehicles)	ID (People)
PT4S4/PT464/PT434 (75mm)	11.7km	5.3km	2.9km	1.3km	1.4km	0.6km
PT4S4/PT464/PT434 (25～75mm)	3.9km～11.7km	1.7km～5.3km	1.0km～2.9km	0.4km～1.3km	0.5km～1.4km	0.2km～0.6km
PT4S4/PT464/PT434 (100mm)	22km	10km	5.5km	2.5km	2.7km	1.2km